MINI42 Dimensions

Overall Width w/ Trim: 12-1/8"
(Rough Opening: 9-7/8")

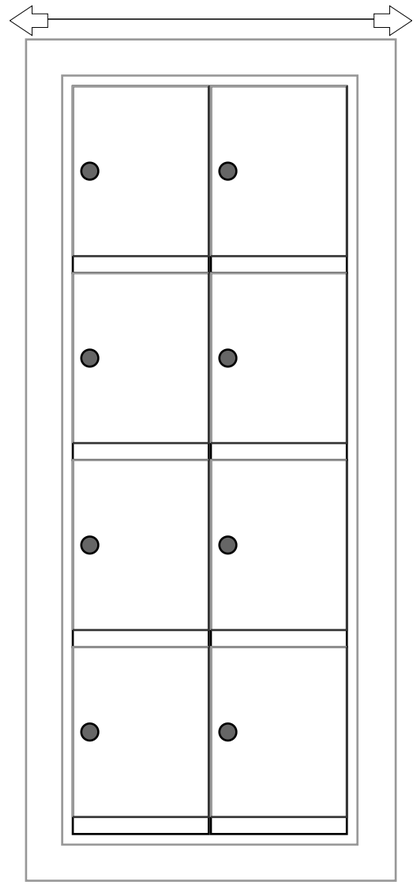

MINI42

Side View

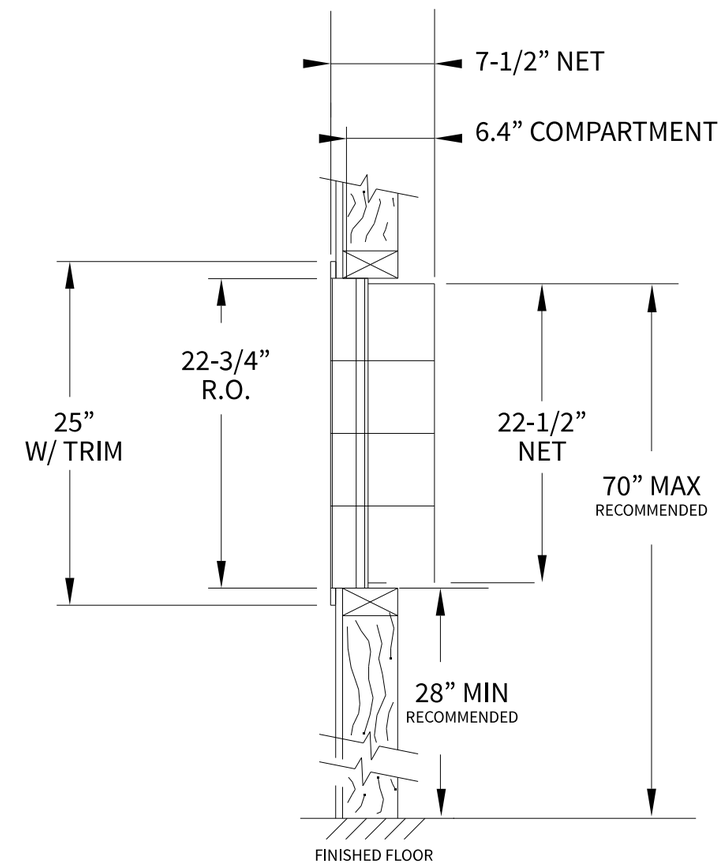

Configuration Details:

1. **Product Type:** Mini Storage Locker
2. **Installation:** No Master Access, Recessed Mount
3. **Finish:** Anodized Aluminum
4. **Locks:** Standard Cam Lock, 2 keys
5. **Door Id:** tbd

Matching standard snap-on trim included

Models Used:

(1) MINI42

DO NOT SCALE OFF DRAWING

Door Sizes Used:

(8) MINI-A 1x1 Compartment

ELEVATION: MINI42 | **LOCKERS:** 8 |

PROJECT NAME: Mini Storage Lockers

DRAWN BY: FLORENCE

AF FLORENCE manufacturing company
5935 Corporate Drive • Manhattan, KS 66503
www.florencemailboxes.com • 800.275.1747
A GIBRALTAR INDUSTRIES COMPANY

DATE: 01-15-2016	**P.O. NO:**
SCALE: NONE	**QUOTE NO:**
DRAWING NO. WEB-1932	**SHEET** 1 OF 1