# 1500/1550/1700 CABINET INSTALLATION INSTRUCTIONS (REAR LOAD)

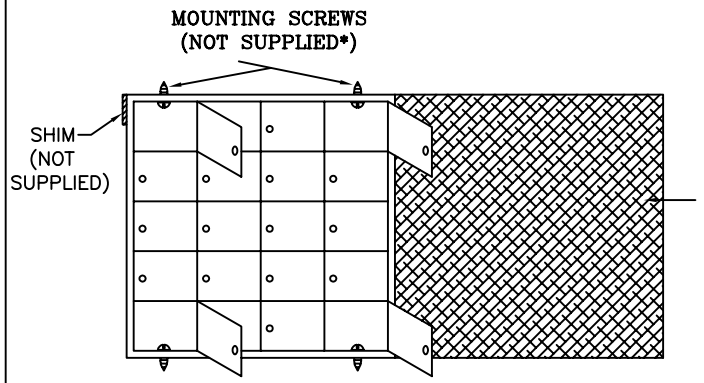


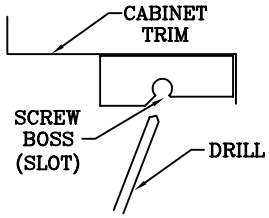


GATE DETAIL

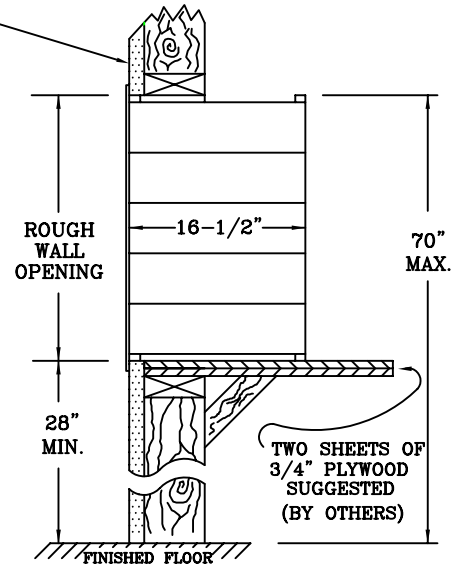


NOTE: WHEN SNAP ON TRIM IS USED, CABINET MUST PROJECT 3/8" BEYOND FINISHED WALL TO MAKE A FLUSH SURFACE BETWEEN THE CABINET AND THE TRIM, SEE OPTIONAL TRIM DETAIL.

1. SLIDE FIRST GROUP OF BOXES INTO THE ROUGH OPENING IN WALL.
2. OPEN ALL FOUR CORNER TENANT DOORS AND DRILL HOLES THROUGH GATE FRAME IN SCREW BOSS (SLOT), SEE GATE DETAIL.
3. PARTIALLY INSTALL TWO MOUNTING SCREWS* IN THE TOP AND TWO IN THE BOTTOM.
4. SHIM AS NECESSARY FOR GATE TO OPEN AND CLOSE FREELY. TIGHTEN MOUNTING SCREWS.
5. INSTALL NEXT GROUP OF BOXES THE SAME AS ABOVE.

NEXT STEPS ONLY FOR CABINETS WITH OPTIONAL SNAP ON TRIM

6. SCREW MOUNTING CLIP TO WALL USING #8 X 1-1/4" SCREWS, SEE OPTIONAL TRIM DETAIL.
7. HOOK ONE EDGE OF TRIM OVER LEG OF CLIP AND SNAP OVER SECOND LEG OF CLIP.

* FOR CONVENTIONAL LUMBER WE RECOMMEND A #8 X 2" FLAT HEAD WOOD SCREW.

## OPTIONAL SNAP ON TRIM MOUNTING DETAILS

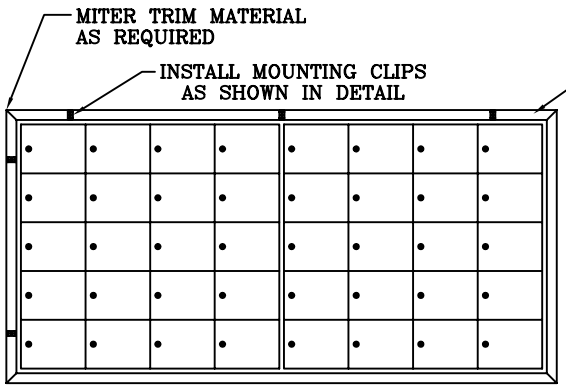


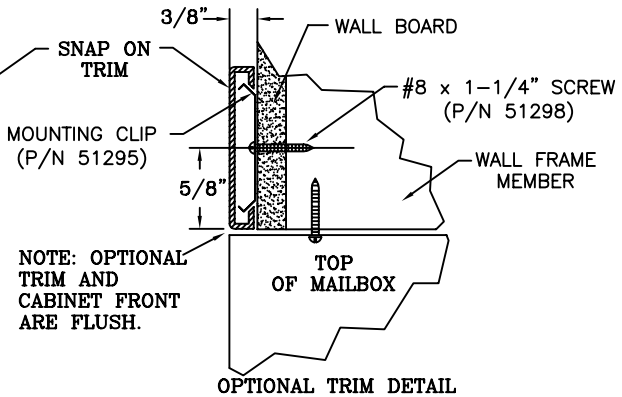


OPTIONAL TRIM DETAIL

USPS STD-4C COMPLIANT MAILBOX SYSTEMS ARE MANDATORY FOR ALL **NEW CONSTRUCTION AND MAJOR RENOVATIONS**. MAILBOXES THAT ARE 4B+ COMPLIANT WILL ONLY BE CONSIDERED USPS APPROVED IF THEY ARE **REPLACING** EXISTING MAILBOXES. CHECK WITH LOCAL POSTAL OFFICIAL PRIOR TO INSTALLING MAILBOX.

1500 SERIES ARE 4B+ COMPLIANT
1550/1700 SERIES ARE NOT 4B+ COMPLIANT

PRODUCT SERIES: RECOMMENDED MOUNTING DETAILS FOR 1500/1550/1700 SERIES R/L MAILBOXES


AF FLORENCE manufacturing company
5935 Corporate Drive • Manhattan, KS 66503
www.florencemailboxes.com • (800) 275-1747
A GIBRALTAR INDUSTRIES COMPANY


| | | | |
|---|---|---|---|
| MODEL | AF HORZ. | REV | A |
| SCALE | NONE | LAST REV DATE | 7/6/2009 |
| DRAWING NUMBER | CS2059 | DRAWN BY | NBC |